Restricted data sheet

BMP180
Digital pressure sensor

Bosch Sensortec

BMP180 Data sheet	
Document revision	2.8
Document release date	May 7th, 2015
Document number	BST-BMP180-DS000-12
Technical reference code(s)	0 273 300 244
Notes	Data in this document are subject to change without notice. Product photos and pictures are for illustration purposes only and may differ from the real product's appearance.

BMP180

DIGITAL PRESSURE SENSOR

Key features

Pressure range:	300 ... 1100hPa (+9000m ... -500m relating to sea level)
Supply voltage:	1.8 ... 3.6V (V_{DD}) 1.62V ... 3.6V (V_{DDIO})
Package:	LGA package with metal lid Small footprint: 3.6mm x 3.8mm Super-flat: 0.93mm height
Low power:	5µA at 1 sample / sec. in standard mode
Low noise:	0.06hPa (0.5m) in ultra low power mode 0.02hPa (0.17m) advanced resolution mode

- Temperature measurement included
- I^2C interface
- Fully calibrated
- Pb-free, halogen-free and RoHS compliant,
- MSL 1

Typical applications

- Enhancement of GPS navigation (dead-reckoning, slope detection, etc.)
- In- and out-door navigation
- Leisure and sports
- Weather forecast
- Vertical velocity indication (rise/sink speed)

© Bosch Sensortec GmbH reserves all rights even in the event of industrial property rights. We reserve all rights of disposal such as copying and passing on to third parties. BOSCH and the symbol are registered trademarks of Robert Bosch GmbH, Germany.
Note: Specifications within this document are subject to change without notice.

BMP180 general description

The BMP180 is the function compatible successor of the BMP085, a new generation of high precision digital pressure sensors for consumer applications.

The ultra-low power, low voltage electronics of the BMP180 is optimized for use in mobile phones, PDAs, GPS navigation devices and outdoor equipment. With a low altitude noise of merely 0.25m at fast conversion time, the BMP180 offers superior performance. The I^2C interface allows for easy system integration with a microcontroller.

The BMP180 is based on piezo-resistive technology for EMC robustness, high accuracy and linearity as well as long term stability.

Robert Bosch is the world market leader for pressure sensors in automotive applications. Based on the experience of over 400 million pressure sensors in the field, the BMP180 continues a new generation of micro-machined pressure sensors.

© Bosch Sensortec GmbH reserves all rights even in the event of industrial property rights. We reserve all rights of disposal such as copying and passing on to third parties. BOSCH and the symbol are registered trademarks of Robert Bosch GmbH, Germany.
Note: Specifications within this document are subject to change without notice.

Index of Contents

1. ELECTRICAL CHARACTERISTICS 6

2. ABSOLUTE MAXIMUM RATINGS 8

3. OPERATION 9

3.1 GENERAL DESCRIPTION 9
3.2 GENERAL FUNCTION AND APPLICATION SCHEMATICS 9
3.3 MEASUREMENT OF PRESSURE AND TEMPERATURE 11
3.3.1 Hardware pressure sampling accuracy modes 12
3.3.2 Software pressure sampling accuracy modes 13
3.4 CALIBRATION COEFFICIENTS 13
3.5 CALCULATING PRESSURE AND TEMPERATURE 14
3.6 CALCULATING ABSOLUTE ALTITUDE 16
3.7 CALCULATING PRESSURE AT SEA LEVEL 17

4. GLOBAL MEMORY MAP 18

5. I²C INTERFACE 19

5.1 I²C SPECIFICATION 19
5.2 DEVICE AND REGISTER ADDRESS 20
5.3 I²C PROTOCOL 20
5.4 START TEMPERATURE AND PRESSURE MEASUREMENT 21
5.5 READ A/D CONVERSION RESULT OR E²PROM DATA 22

6. PACKAGE 23

6.1 PIN CONFIGURATION 23
6.2 OUTLINE DIMENSIONS 24
6.2.1 Bottom view 24
6.2.2 Top view 25
6.2.3 Side view 25
6.3 MOISTURE SENSITIVITY LEVEL AND SOLDERING 26
6.4 ROHS COMPLIANCY 26
6.5 MOUNTING AND ASSEMBLY RECOMMENDATIONS 26

7. LEGAL DISCLAIMER 27

© Bosch Sensortec GmbH reserves all rights even in the event of industrial property rights. We reserve all rights of disposal such as copying and passing on to third parties. BOSCH and the symbol are registered trademarks of Robert Bosch GmbH, Germany.
Note: Specifications within this document are subject to change without notice.

7.1 ENGINEERING SAMPLES 27
7.2 PRODUCT USE 27
7.3 APPLICATION EXAMPLES AND HINTS 27

8. DOCUMENT HISTORY AND MODIFICATION 28

© Bosch Sensortec GmbH reserves all rights even in the event of industrial property rights. We reserve all rights of disposal such as copying and passing on to third parties. BOSCH and the symbol are registered trademarks of Robert Bosch GmbH, Germany.
Note: Specifications within this document are subject to change without notice.

1. Electrical characteristics

If not stated otherwise, the given values are ±3-Sigma values over temperature/voltage range in the given operation mode. All values represent the new parts specification; additional solder drift is shown separately.

Table 1: Operating conditions, output signal and mechanical characteristics

Parameter	Symbol	Condition	Min	Typ	Max	Units
Operating temperature	T_A	operational	-40		+85	°C
		full accuracy	0		+65	
Supply voltage	V_{DD}	ripple max. 50mVpp	1.8	2.5	3.6	V
			1.62	2.5	3.6	
Supply current @ 1 sample / sec. 25°C	I_{DDLOW}	ultra low power mode		3		µA
	I_{DDSTD}	standard mode		5		µA
	I_{DDHR}	high resolution mode		7		µA
	I_{DDUHR}	Ultra high res. mode		12		µA
	I_{DDAR}	Advanced res. mode		32		µA
Peak current	I_{peak}	during conversion		650		µA
Standby current	I_{DDSBM}	@ 25°C		0.1	4[1]	µA
Relative accuracy pressure V_{DD} = 3.3V		950 . . . 1050 hPa @ 25 °C		±0.12		hPa
				±1.0		m
		700 ... 900hPa 25 . . . 40 °C		±0.12		hPa
				±1.0		m
Absolute accuracy pressure V_{DD} = 3.3V		300 . . . 1100 hPa 0 . . . +65 °C	-4.0	-1.0*	+2.0	hPa
		300 . . . 1100 hPa -20 . . . 0 °C	-6.0	-1.0*	+4.5	hPa
Resolution of output data		pressure		0.01		hPa
		temperature		0.1		°C
Noise in pressure		see table on page 12-13				
Absolute accuracy temperature V_{DD} = 3.3V		@ 25 °C	-1.5	±0.5	+1.5	°C
		0 . . . +65 °C	-2.0	±1.0	+2.0	°C

[1] at 85°C

© Bosch Sensortec GmbH reserves all rights even in the event of industrial property rights. We reserve all rights of disposal such as copying and passing on to third parties. BOSCH and the symbol are registered trademarks of Robert Bosch GmbH, Germany.
Note: Specifications within this document are subject to change without notice.

Conversion time pressure	$t_{c_p_low}$	ultra low power mode		3	4.5	ms
	$t_{c_p_std}$	standard mode		5	7.5	ms
	$t_{c_p_hr}$	high resolution mode		9	13.5	ms
	$t_{c_p_luhr}$	ultra high res. mode		17	25.5	ms
	$t_{c_p_ar}$	Advanced res. mode		51	76.5	ms
Conversion time temperature	t_{C_temp}	standard mode		3	4.5	ms
Serial data clock	f_{SCL}				3.4	MHz
Solder drifts		Minimum solder height 50µm	-0.5		+2	hPa
Long term stability**		12 months		±1.0		hPa

* The typical value is: -1±1
** Long term stability is specified in the full accuracy operating pressure range 0 … 65°C

© Bosch Sensortec GmbH reserves all rights even in the event of industrial property rights. We reserve all rights of disposal such as copying and passing on to third parties. BOSCH and the symbol are registered trademarks of Robert Bosch GmbH, Germany.
Note: Specifications within this document are subject to change without notice.

2. Absolute maximum ratings

Table 2: Absolute maximum ratings

Parameter	Condition	Min	Max	Units
Storage temperature		-40	+85	°C
Supply voltage	all pins	-0.3	+4.25	V
ESD rating	HBM, R = 1.5kΩ, C = 100pF		±2	kV
Overpressure			10,000	hPa

The BMP180 has to be handled as Electrostatic Sensitive Device (ESD).

Figure 1: ESD

© Bosch Sensortec GmbH reserves all rights even in the event of industrial property rights. We reserve all rights of disposal such as copying and passing on to third parties. BOSCH and the symbol are registered trademarks of Robert Bosch GmbH, Germany.
Note: Specifications within this document are subject to change without notice.

3. Operation

3.1 General description

The BMP180 is designed to be connected directly to a microcontroller of a mobile device via the I^2C bus. The pressure and temperature data has to be compensated by the calibration data of the E^2PROM of the BMP180.

3.2 General function and application schematics

The BMP180 consists of a piezo-resistive sensor, an analog to digital converter and a control unit with E^2PROM and a serial I^2C interface. The BMP180 delivers the uncompensated value of pressure and temperature. The E^2PROM has stored 176 bit of individual calibration data. This is used to compensate offset, temperature dependence and other parameters of the sensor.

- UP = pressure data (16 to 19 bit)
- UT = temperature data (16 bit)

© Bosch Sensortec GmbH reserves all rights even in the event of industrial property rights. We reserve all rights of disposal such as copying and passing on to third parties. BOSCH and the symbol are registered trademarks of Robert Bosch GmbH, Germany.
Note: Specifications within this document are subject to change without notice.

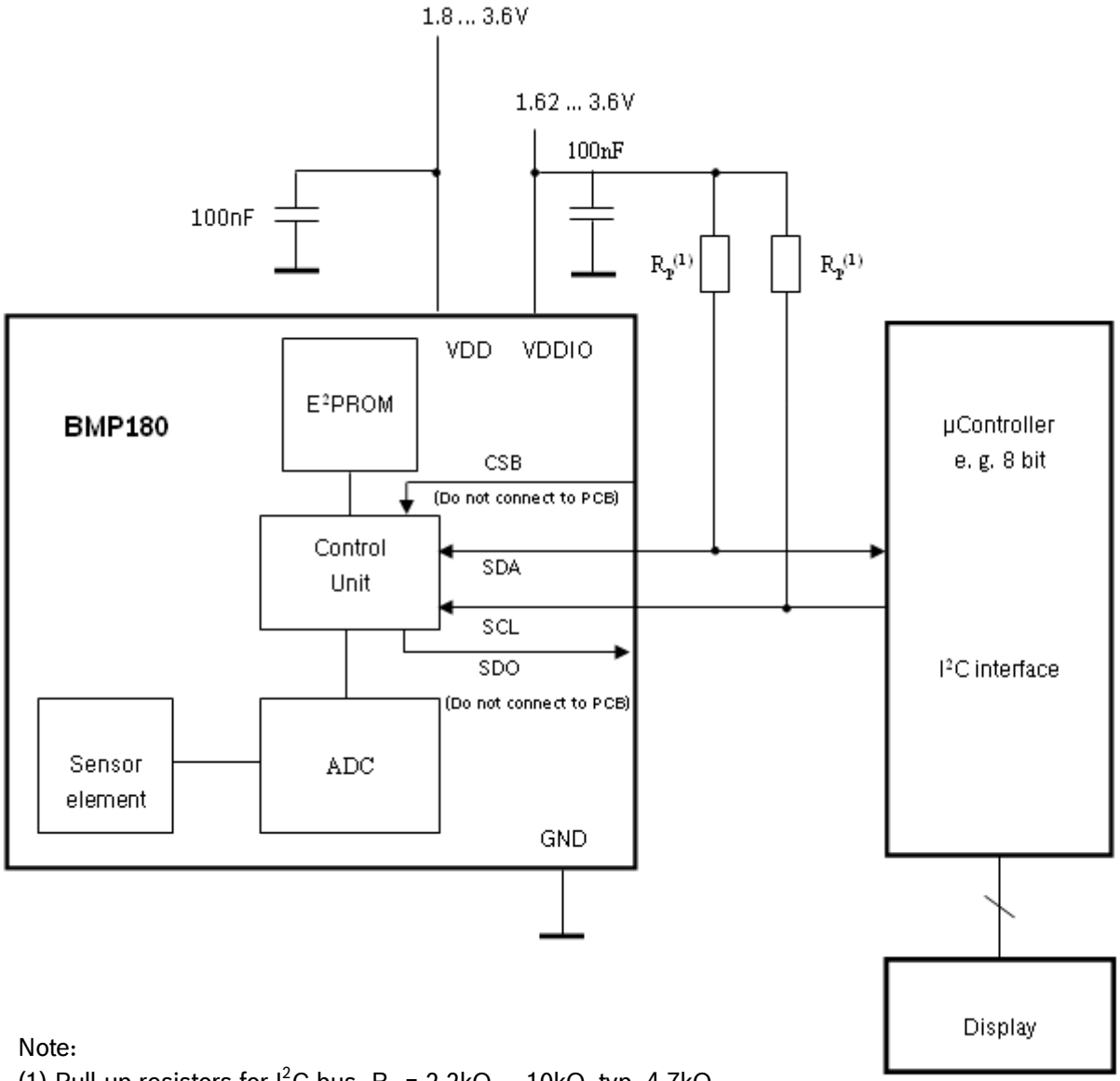

Note:
(1) Pull-up resistors for I^2C bus, R_p = 2.2kΩ ... 10kΩ, typ. 4.7kΩ

Figure 2: Typical application circuit

© Bosch Sensortec GmbH reserves all rights even in the event of industrial property rights. We reserve all rights of disposal such as copying and passing on to third parties. BOSCH and the symbol are registered trademarks of Robert Bosch GmbH, Germany.
Note: Specifications within this document are subject to change without notice.

3.3 Measurement of pressure and temperature

For all calculations presented here an ANSI C code is available from Bosch Sensortec ("BMP180 _API").

The microcontroller sends a start sequence to start a pressure or temperature measurement. After converting time, the result value (UP or UT, respectively) can be read via the I^2C interface. For calculating temperature in °C and pressure in hPa, the calibration data has to be used. These constants can be read out from the BMP180 E^2PROM via the I^2C interface at software initialization.

The sampling rate can be increased up to 128 samples per second (standard mode) for dynamic measurement. In this case, it is sufficient to measure the temperature only once per second and to use this value for all pressure measurements during the same period.

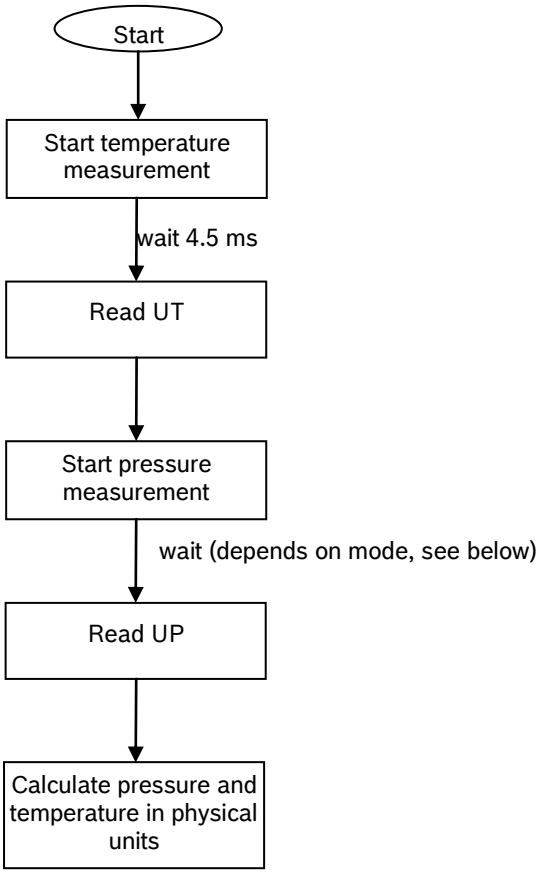

Figure 3: Measurement flow BMP180

© Bosch Sensortec GmbH reserves all rights even in the event of industrial property rights. We reserve all rights of disposal such as copying and passing on to third parties. BOSCH and the symbol are registered trademarks of Robert Bosch GmbH, Germany.
Note: Specifications within this document are subject to change without notice.

3.3.1 Hardware pressure sampling accuracy modes

By using different modes the optimum compromise between power consumption, speed and resolution can be selected, see below table.

Table 3: Overview of BMP180 hardware accuracy modes, selected by driver software via the variable *oversampling_setting*

Mode	Parameter *oversampling_setting*	Internal number of samples	Conversion time pressure max. [ms]	Avg. current @ 1 sample/s typ. [µA]	RMS noise typ. [hPa]	RMS noise typ. [m]
ultra low power	0	1	4.5	3	0.06	0.5
standard	1	2	7.5	5	0.05	0.4
high resolution	2	4	13.5	7	0.04	0.3
ultra high resolution	3	8	25.5	12	0.03	0.25

For further information on noise characteristics see the relevant application note “Noise in pressure sensor applications”.

All modes can be performed at higher speeds, e.g. up to 128 times per second for standard mode, with the current consumption increasing proportionally to the sample rate.

© Bosch Sensortec GmbH reserves all rights even in the event of industrial property rights. We reserve all rights of disposal such as copying and passing on to third parties. BOSCH and the symbol are registered trademarks of Robert Bosch GmbH, Germany.
Note: Specifications within this document are subject to change without notice.

3.3.2 Software pressure sampling accuracy modes

For applications where a low noise level is critical, averaging is recommended if the lower bandwidth is acceptable. Oversampling can be enabled using the software API driver (with OSR = 3).

Table 4: Overview of BMP180 software accuracy mode, selected by driver software via the variable *software_oversampling_setting*

Mode	Parameter *oversampling_setting*	software_ oversampling_setting	Conversion time pressure max. [ms]	Avg. current @ 1 sample/s typ. [µA]	RMS noise typ. [hPa]	RMS noise typ. [m]
Advanced resolution	3	1	76.5	32	0.02	0.17

3.4 Calibration coefficients

The 176 bit E^2PROM is partitioned in 11 words of 16 bit each. These contain 11 calibration coefficients. Every sensor module has individual coefficients. Before the first calculation of temperature and pressure, the master reads out the E^2PROM data.
The data communication can be checked by checking that none of the words has the value 0 or 0xFFFF.

Table 5: Calibration coefficients

	BMP180 reg adr	
Parameter	**MSB**	**LSB**
AC1	0xAA	0xAB
AC2	0xAC	0xAD
AC3	0xAE	0xAF
AC4	0xB0	0xB1
AC5	0xB2	0xB3
AC6	0xB4	0xB5
B1	0xB6	0xB7
B2	0xB8	0xB9
MB	0xBA	0xBB
MC	0xBC	0xBD
MD	0xBE	0xBF

© Bosch Sensortec GmbH reserves all rights even in the event of industrial property rights. We reserve all rights of disposal such as copying and passing on to third parties. BOSCH and the symbol are registered trademarks of Robert Bosch GmbH, Germany.
Note: Specifications within this document are subject to change without notice.

3.5 Calculating pressure and temperature

The mode (ultra low power, standard, high, ultra high resolution) can be selected by the variable *oversampling_setting* (0, 1, 2, 3) in the C code.

Calculation of true temperature and pressure in steps of 1Pa (= 0.01hPa = 0.01mbar) and temperature in steps of 0.1°C.

The following figure shows the detailed algorithm for pressure and temperature measurement.

This algorithm is available to customers as reference C source code ("BMP180_ API") from Bosch Sensortec and via its sales and distribution partners. **Please contact your Bosch Sensortec representative for details.**

© Bosch Sensortec GmbH reserves all rights even in the event of industrial property rights. We reserve all rights of disposal such as copying and passing on to third parties. BOSCH and the symbol are registered trademarks of Robert Bosch GmbH, Germany.
Note: Specifications within this document are subject to change without notice.

Calculation of pressure and temperature for BMP180

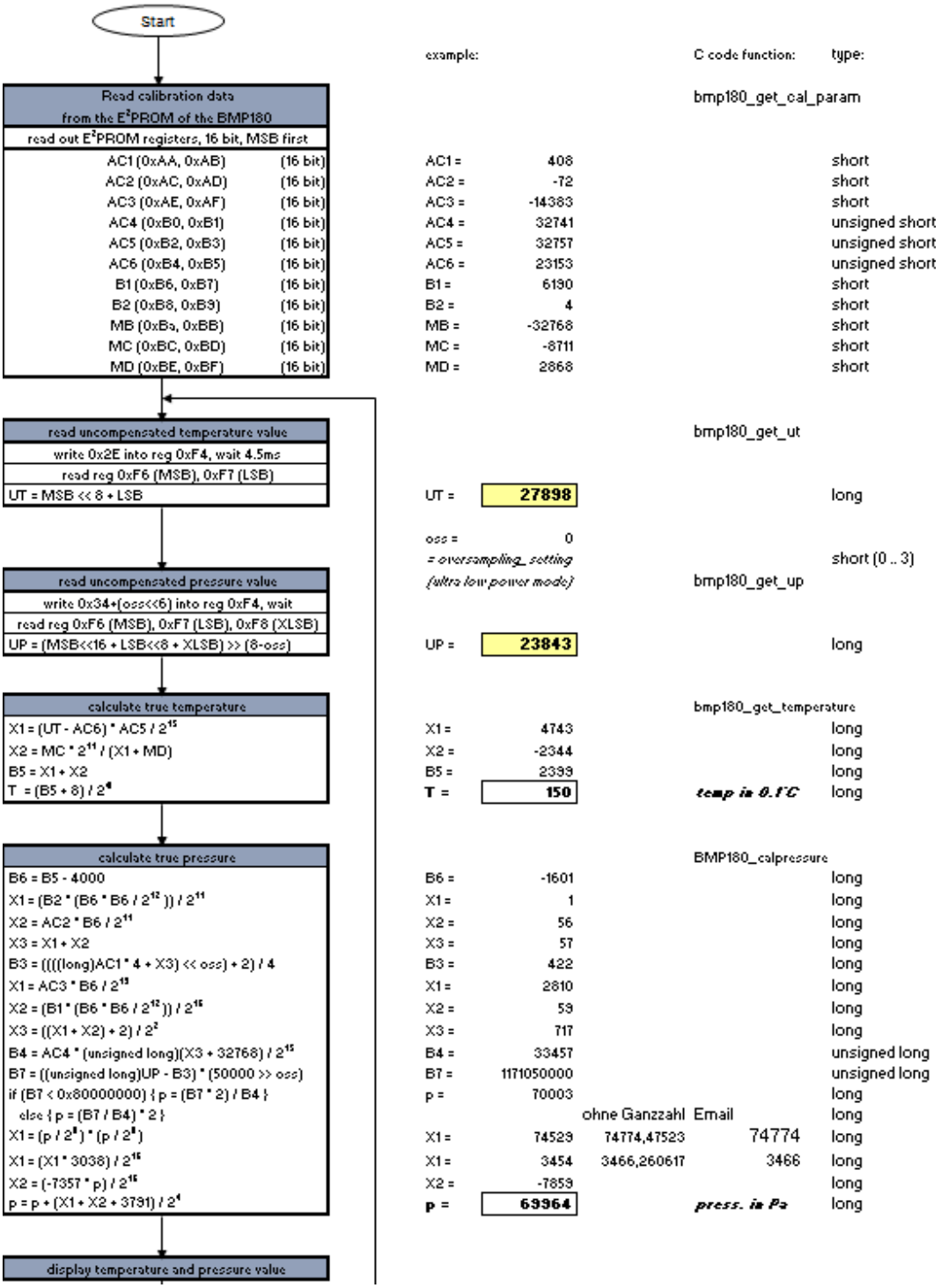

Figure 4: Algorithm for pressure and temperature measurement

© Bosch Sensortec GmbH reserves all rights even in the event of industrial property rights. We reserve all rights of disposal such as copying and passing on to third parties. BOSCH and the symbol are registered trademarks of Robert Bosch GmbH, Germany.
Note: Specifications within this document are subject to change without notice.

3.6 Calculating absolute altitude

With the measured pressure p and the pressure at sea level p_0 e.g. 1013.25hPa, the altitude in meters can be calculated with the international barometric formula:

$$\text{altitude} = 44330 * \left(1 - \left(\frac{p}{p_0}\right)^{\frac{1}{5.255}}\right)$$

Thus, a pressure change of Δp = 1hPa corresponds to 8.43m at sea level.

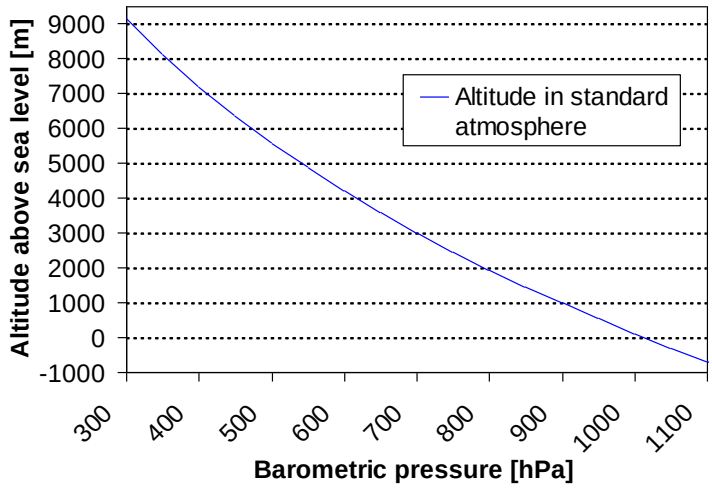

Figure 5: Transfer function: Altitude over sea level – Barometric pressure

© Bosch Sensortec GmbH reserves all rights even in the event of industrial property rights. We reserve all rights of disposal such as copying and passing on to third parties. BOSCH and the symbol are registered trademarks of Robert Bosch GmbH, Germany.
Note: Specifications within this document are subject to change without notice.

3.7 Calculating pressure at sea level

With the measured pressure *p* and the absolute altitude the pressure at sea level can be calculated:

$$p_0 = \frac{p}{\left(1 - \frac{\text{altitude}}{44330}\right)^{5.255}}$$

Thus, a difference in altitude of Δaltitude = 10m corresponds to 1.2hPa pressure change at sea level.

© Bosch Sensortec GmbH reserves all rights even in the event of industrial property rights. We reserve all rights of disposal such as copying and passing on to third parties. BOSCH and the symbol are registered trademarks of Robert Bosch GmbH, Germany.
Note: Specifications within this document are subject to change without notice.

4. Global Memory Map

The memory map below shows all externally accessible data registers which are needed to operate BMP180. The left columns show the memory addresses. The columns in the middle depict the content of each register bit. The colors of the bits indicate whether they are read-only, write-only or read- and writable. The memory is volatile so that the writable content has to be re-written after each power-on.
Not all register addresses are shown. These registers are reserved for further Bosch factory testing and trimming.

Register Name	Register Address	bit7	bit6	bit5	bit4	bit3	bit2	bit1	bit0	Reset
out_xlsb	F8h	adc_out_xlsb<7:3					0	0	0	00h
out_lsb	F7h	adc_out_msb<7:0>								00h
out_msb	F6h	adc_out_lsb<7:0								80h
ctrl_meas	F4h	oss<1:0>		sco	measurement					00h
soft	E0h	reset								00h
id	D0h	id<7:0>								55h
calib21 downto calib0	BFh *down*to AAh	calib21<7:0>*down*to calib0<7:0>								n/a

Registers:	Control	Calibration	Dat	
Type:	registers	registers	registers	Fixed

Figure 6: Memory map

Measurement control (register F4h <4:0>): Controls measurements. Refer to Figure 6 for usage details.

Sco (register F4h <5>): Start of conversion. The value of this bit stays “1” during conversion and is reset to “0” after conversion is complete (data registers are filled).

Oss (register F4h <7:6>): controls the oversampling ratio of the pressure measurement (00b: single, 01b: 2 times, 10b: 4 times, 11b: 8 times).

Soft reset (register E0h): Write only register. If set to 0xB6, will perform the same sequence as power on reset.

Chip-id (register D0h): This value is fixed to 0x55 and can be used to check whether communication is functioning.

After conversion, data registers can be read out in any sequence (i.e. MSB first or LSB first). Using a burst read is not mandatory.

© Bosch Sensortec GmbH reserves all rights even in the event of industrial property rights. We reserve all rights of disposal such as copying and passing on to third parties. BOSCH and the symbol are registered trademarks of Robert Bosch GmbH, Germany.
Note: Specifications within this document are subject to change without notice.

5. I²C Interface

- I²C is a digital two wire interface
- Clock frequencies up to 3.4Mbit/sec. (I²C standard, fast and high-speed mode supported)
- SCL and SDA needs a pull-up resistor, typ. 4.7kOhm to V_{DDIO}
  (one resistor each for all the I²C bus)

The I²C bus is used to control the sensor, to read calibration data from the E²PROM and to read the measurement data when A/D conversion is finished. SDA (serial data) and SCL (serial clock) have open-drain outputs.

For detailed I²C-bus specification please refer to:
http://www.nxp.com/acrobat_download/literature/9398/39340011.pdf

5.1 I²C specification

Table 6: Electrical parameters for the I²C interface

Parameter	Symbol	Min.	Typ	Max.	Units
Clock input frequency	f_{SCL}			3.4	MHz
Input-low level	V_{IL}	0		0.2 * V_{DDIO}	V
Input-high level	V_{IH}	0.8 * V_{DDIO}		V_{DDIO}	V
Voltage output low level @ V_{DDIO} = 1.62V, I_{OL} = 3mA	V_{OL}			0.3	V
SDA and SCL pull-up resistor	$R_{pull\text{-}up}$	2.2		10	kOhm
SDA sink current @ V_{DDIO} = 1.62V, V_{OL} = 0.3V	I_{SDA_sink}		9		mA
Start-up time after power-up, before first communication	t_{Start}	10			Ms

© Bosch Sensortec GmbH reserves all rights even in the event of industrial property rights. We reserve all rights of disposal such as copying and passing on to third parties. BOSCH and the symbol are registered trademarks of Robert Bosch GmbH, Germany.
Note: Specifications within this document are subject to change without notice.

5.2 Device and register address

The BMP180 module address is shown below. The LSB of the device address distinguishes between read (1) and write (0) operation, corresponding to address 0xEF (read) and 0xEE (write).

Table 7: BMP180 addresses

A7	A6	A5	A4	A3	A2	A1	W/R
1	1	1	0	1	1	1	0/1

5.3 I²C protocol

The I²C interface protocol has special bus signal conditions. Start (S), stop (P) and binary data conditions are shown below. At start condition, SCL is high and SDA has a falling edge. Then the slave address is sent. After the 7 address bits, the direction control bit R/W selects the read or write operation. When a slave device recognizes that it is being addressed, it should acknowledge by pulling SDA low in the ninth SCL (ACK) cycle.
At stop condition, SCL is also high, but SDA has a rising edge. Data must be held stable at SDA when SCL is high. Data can change value at SDA only when SCL is low.
Even though V_{DDIO} can be powered on before V_{DD}, there is a chance of excessive power consumption (a few mA) if this sequence is used, and the state of the output pins is undefined so that the bus can be locked. Therefore, V_{DD} *must* be powered before V_{DDIO} unless the limitations above are understood and not critical.

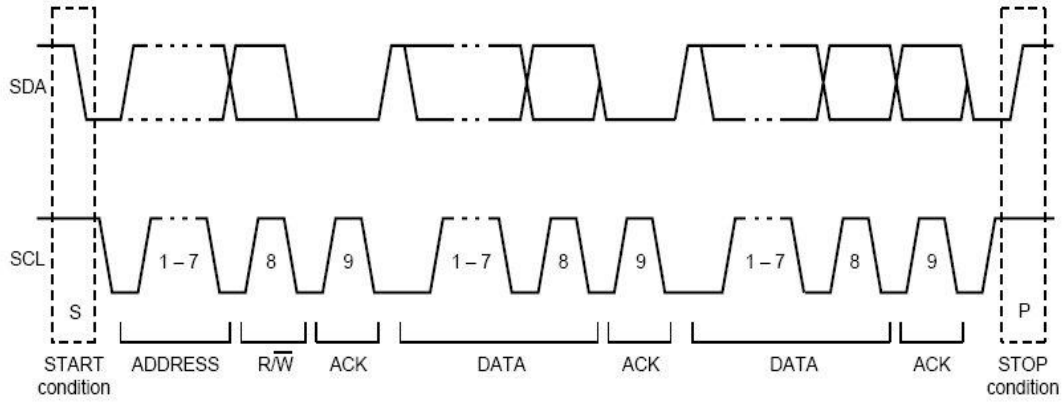

Figure 7: I²C protocol

© Bosch Sensortec GmbH reserves all rights even in the event of industrial property rights. We reserve all rights of disposal such as copying and passing on to third parties. BOSCH and the symbol are registered trademarks of Robert Bosch GmbH, Germany.
Note: Specifications within this document are subject to change without notice.

5.4 Start temperature and pressure measurement

The timing diagrams to start the measurement of the temperature value UT and pressure value UP are shown below. After start condition the master sends the device address write, the register address and the control register data. The BMP180 sends an acknowledgement (ACKS) every 8 data bits when data is received. The master sends a stop condition after the last ACKS.

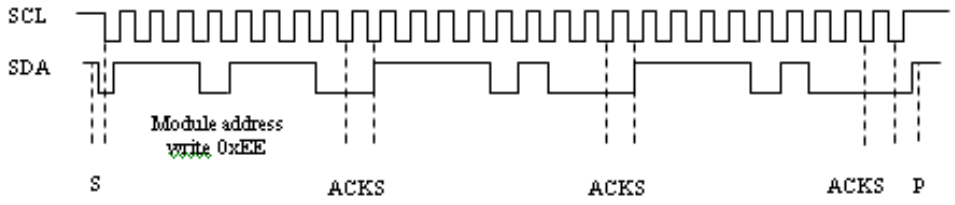

Figure 8: Timing diagram for starting pressure measurement

Abbreviations:

S	Start
P	Stop
ACKS	Acknowledge by Slave
ACKM	Acknowledge by Master
NACKM	Not Acknowledge by Master

Table 8: Control registers values for different internal oversampling_setting (oss)

Measurement	Control register value (register address 0xF4)	Max. conversion time [ms]
Temperature	0x2E	4.5
Pressure (oss = 0)	0x34	4.5
Pressure (oss = 1)	0x74	7.5
Pressure (oss = 2)	0xB4	13.5
Pressure (oss = 3)	0xF4	25.5

© Bosch Sensortec GmbH reserves all rights even in the event of industrial property rights. We reserve all rights of disposal such as copying and passing on to third parties. BOSCH and the symbol are registered trademarks of Robert Bosch GmbH, Germany.
Note: Specifications within this document are subject to change without notice.

5.5 Read A/D conversion result or E²PROM data

To read out the temperature data word UT (16 bit), the pressure data word UP (16 to 19 bit) and the E²PROM data proceed as follows:

After the start condition the master sends the module address write command and register address. The register address selects the read register:

E²PROM data registers 0xAA to 0xBF
Temperature or pressure value UT or UP 0xF6 (MSB), 0xF7 (LSB), optionally 0xF8 (XLSB)

Then the master sends a restart condition followed by the module address read that will be acknowledged by the BMP180 (ACKS). The BMP180 sends first the 8 MSB, acknowledged by the master (ACKM), then the 8 LSB. The master sends a "not acknowledge" (NACKM) and finally a stop condition.

Optionally for ultra high resolution, the XLSB register with address 0xF8 can be read to extend the 16 bit word to up to 19 bits; refer to the application programming interface (API) software rev. 1.1 (“BMP180_ API”, available from Bosch Sensortec).

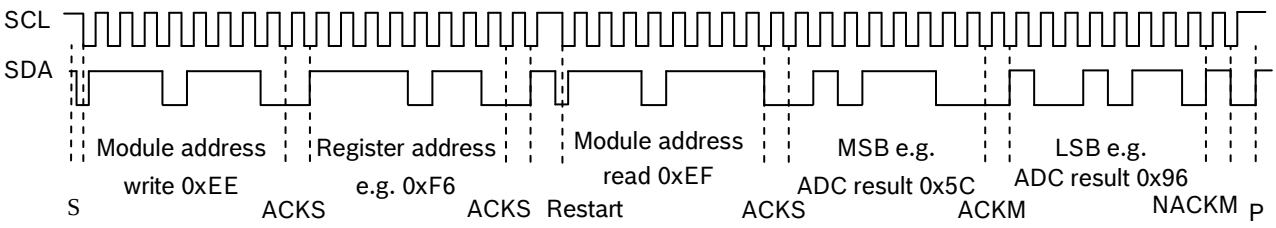

Figure 9: Timing diagram read 16 bit A/D conversion result

© Bosch Sensortec GmbH reserves all rights even in the event of industrial property rights. We reserve all rights of disposal such as copying and passing on to third parties. BOSCH and the symbol are registered trademarks of Robert Bosch GmbH, Germany.
Note: Specifications within this document are subject to change without notice.

6. Package

6.1 Pin configuration

Picture shows the device in top view. Device pins are shown here transparently only for orientation purposes.

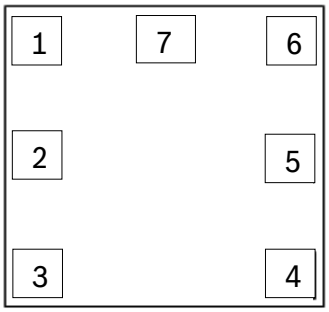

Figure 10: Layout pin configuration BMP180

Table 9: Pin configuration BMP180

in No	Name	Function
1	CSB*	Chip select
2	VDD	Power supply
3	VDDIO	Digital power supply
4	SDO*	SPI output
5	SCL	I2C serial bus clock input
6	SDA	I2C serial bus data (or SPI input)
7	GND	Ground

* A pin compatible product variant with SPI interface is possible upon customer's request. For I^2C (standard case) CSB and SDO are not used, they have to be left open.
All pins have to be soldered to the PCB for symmetrical stress input even though they are not connected internally.

© Bosch Sensortec GmbH reserves all rights even in the event of industrial property rights. We reserve all rights of disposal such as copying and passing on to third parties. BOSCH and the symbol are registered trademarks of Robert Bosch GmbH, Germany.
Note: Specifications within this document are subject to change without notice.

6.2 Outline dimensions

The sensor housing is a 7Pin LGA package with metal lid. Its dimensions are 3.60mm (±0.1 mm) x 3.80mm (±0.1 mm) x 0.93mm (±0.07 mm).

Note: All dimensions are in mm.

6.2.1 Bottom view

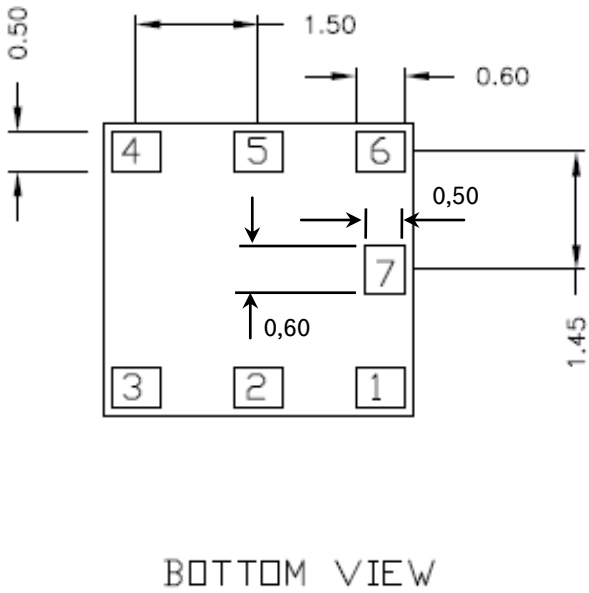

Figure 11: Bottom view BMP180

© Bosch Sensortec GmbH reserves all rights even in the event of industrial property rights. We reserve all rights of disposal such as copying and passing on to third parties. BOSCH and the symbol are registered trademarks of Robert Bosch GmbH, Germany.
Note: Specifications within this document are subject to change without notice.

6.2.2 Top view

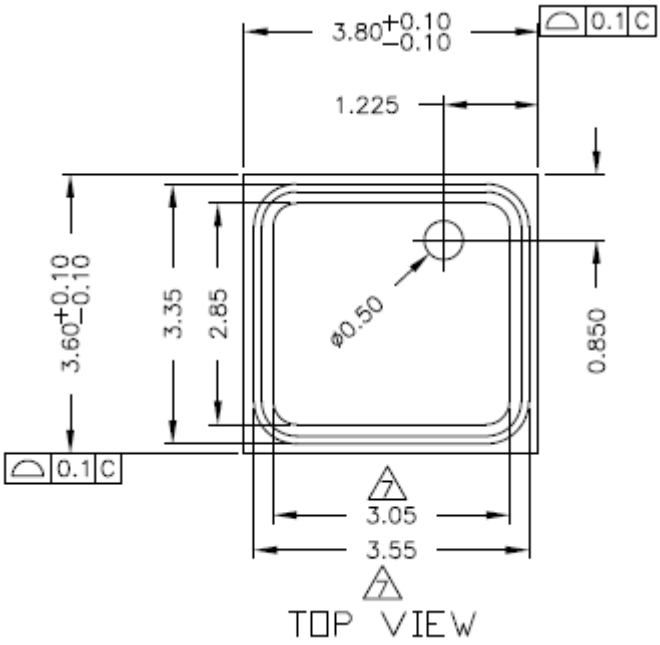

Figure 12: Top view BMP180

6.2.3 Side view

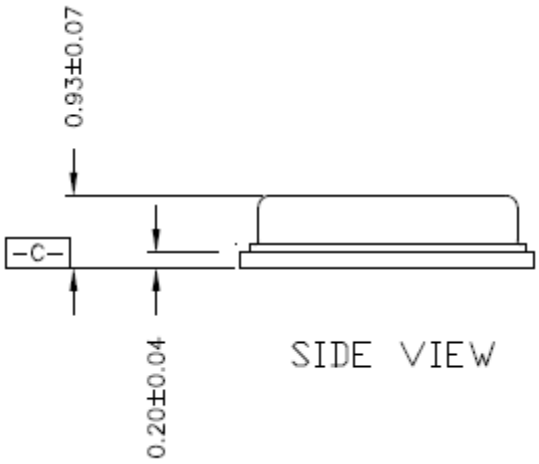

Figure 13: Side view BMP180

© Bosch Sensortec GmbH reserves all rights even in the event of industrial property rights. We reserve all rights of disposal such as copying and passing on to third parties. BOSCH and the symbol are registered trademarks of Robert Bosch GmbH, Germany.
Note: Specifications within this document are subject to change without notice.

6.3 Moisture sensitivity level and soldering

The BMP180 is classified MSL 1 (moisture sensitivity level) according to IPC/JEDEC standards J-STD-020D and J-STD-033A.

The device can be soldered Pb-free with a peak temperature of 260°C for 20 to 40 sec. The minimum height of the solder after reflow shall be at least 50µm. This is required for good mechanical decoupling between the sensor device and the printed circuit board (PCB).

To ensure good solder-ability, the devices shall be stored at room temperature (20°C).

The soldering process can lead to an offset shift.

6.4 RoHS compliancy

The BMP180 sensor meets the requirements of the EC directive "Restriction of hazardous substances (RoHS)", please refer also to:

"Directive 2011/65/EU of the European Parliament and of the Council of 8 June 2011 on the restriction of the use of certain hazardous substances in electrical and electronic equipment".

The BMP180 sensor is also halogen-free.

6.5 Mounting and assembly recommendations

In order to achieve the specified performance for you design, the following recommendations and the “Handling, soldering & mounting instructions BMP180” should be taken into consideration when mounting a pressure sensor on a printed-circuit board (PCB):

- The clearance above the metal lid shall be 0.1mm at minimum.
- For the device housing appropriate venting needs to be provided in case the ambient pressure shall be measured.
- Liquids shall not come into direct contact with the device.
- During operation the sensor is sensitive to light, which can influence the accuracy of the measurement (photo-current of silicon).
- The BMP180 shall not the placed close the fast heating parts. In case of gradients > 3°C/sec. it is recommended to follow Bosch Sensortec application note ANP004, "Correction of errors induced by fast temperature changes". Please contact your Bosch Sensortec representative for details.

© Bosch Sensortec GmbH reserves all rights even in the event of industrial property rights. We reserve all rights of disposal such as copying and passing on to third parties. BOSCH and the symbol are registered trademarks of Robert Bosch GmbH, Germany.
Note: Specifications within this document are subject to change without notice.

7. Legal disclaimer

7.1 Engineering samples

Engineering Samples are marked with an asterisk (*) or (e). Samples may vary from the valid technical specifications of the product series contained in this data sheet. They are therefore not intended or fit for resale to third parties or for use in end products. Their sole purpose is internal client testing. The testing of an engineering sample may in no way replace the testing of a product series. Bosch Sensortec assumes no liability for the use of engineering samples. The Purchaser shall indemnify Bosch Sensortec from all claims arising from the use of engineering samples.

7.2 Product use

Bosch Sensortec products are developed for the consumer goods industry. They may only be used within the parameters of this product data sheet. They are not fit for use in life-sustaining or security sensitive systems. Security sensitive systems are those for which a malfunction is expected to lead to bodily harm or significant property damage. In addition, they are not fit for use in products which interact with motor vehicle systems.

The resale and/or use of products are at the purchaser's own risk and his own responsibility. The examination of fitness for the intended use is the sole responsibility of the Purchaser.

The purchaser shall indemnify Bosch Sensortec from all third party claims arising from any product use not covered by the parameters of this product data sheet or not approved by Bosch Sensortec and reimburse Bosch Sensortec for all costs in connection with such claims.

The purchaser must monitor the market for the purchased products, particularly with regard to product safety, and inform Bosch Sensortec without delay of all security relevant incidents.

7.3 Application examples and hints

With respect to any examples or hints given herein, any typical values stated herein and/or any information regarding the application of the device, Bosch Sensortec hereby disclaims any and all warranties and liabilities of any kind, including without limitation warranties of non-infringement of intellectual property rights or copyrights of any third party. The information given in this document shall in no event be regarded as a guarantee of conditions or characteristics. They are provided for illustrative purposes only and no evaluation regarding infringement of intellectual property rights or copyrights or regarding functionality, performance or error has been made.

© Bosch Sensortec GmbH reserves all rights even in the event of industrial property rights. We reserve all rights of disposal such as copying and passing on to third parties. BOSCH and the symbol are registered trademarks of Robert Bosch GmbH, Germany.
Note: Specifications within this document are subject to change without notice.

8. Document history and modification

Rev. No	Chapter	Description of modifications/changes	Date
1.0		First edition for description of serial production material – Preliminary version	
1.1	5.1	New nomenclature of pin configuration	27 July 2010
1.2	5	Design change in package – hole in Lid and without slit	13 September 2010
1.3	3.2 5.1	- Standardizing pin naming over Bosch Sensortec products – typical application circuit - Optimizing pin description, SPI description	15 December 2010
2.0	1	- Non-preliminary version - Verifying parameter through characterization	28 January 2011
2.1	3.2 4 5.3 6.1 6.2.1	- Declaration of SDO and CSB pins in the typical application circuit - Adding global memory map and bits description - Power-up sequence - Description of used interfaces - Dimension pin7	1 April 2011
2.2	6.1	Correction of the pin configuration (editorial change)	14 April 2011
2.3	3.3	Optimizing noise performance	25 May 2011
2.4	6.3	Removed shelf-life constraints	26 January 2012
	page 2	Comparison removed	
	5.1	Voltage output low level added	
	5.3	Power on sequence of V_{DD} and V_{DDIO} defined	
2.5	1	Added max values for supply current for restricted version	15 Feb 2013
	1	Added max value for standby current for restricted version	5 Apr 2013
	Figure 4	Update of calculation of algorithm for pressure and temperature measurement	
	Page 2	Changed wording from “ultra high resolution mode” to “advanced resolution mode”	
2.6	Page 26	Changed document referral from ANP015 to BST-MPS-AN004-00	17 Jan 2014
2.7	3.5	New equation for B3	26 Aug 2014
2.8	Page 26	Updated RoHS directive to 2011/65/EU effective 8 June 2011	07 May 2015

© Bosch Sensortec GmbH reserves all rights even in the event of industrial property rights. We reserve all rights of disposal such as copying and passing on to third parties. BOSCH and the symbol are registered trademarks of Robert Bosch GmbH, Germany.
Note: Specifications within this document are subject to change without notice.

Bosch Sensortec GmbH
Gerhard-Kindler-Strasse 8
72770 Reutlingen / Germany

contact@bosch-sensortec.com
www.bosch-sensortec.com

Modifications reserved | Printed in Germany
Specifications are subject to change without notice
Revision_2.7_082014
Document number: BST-BMP180-DS000-11

© Bosch Sensortec GmbH reserves all rights even in the event of industrial property rights. We reserve all rights of disposal such as copying and passing on to third parties. BOSCH and the symbol are registered trademarks of Robert Bosch GmbH, Germany.
Note: Specifications within this document are subject to change without notice.